NOTES:
1. ALL DIMENSIONS ARE SHOWN IN INCH.
2. MATERIAL: NYLON-66, FLAMMABILITY UL94-V2. BLACK COLOR.
3. P.C. BOARD HOLE DIAMETER RANGE: 0.122"(3.10mm) ~ 0.130"(3.30mm).
4. HEAT SINK HOLE DIAMETER: 0.135" $^{+0.003}_{0.000}$
5. LINK BROKEN IS ACCEPTED, NO FUNCTION DEFECT.
6. COMPLY WITH EU RoHS DIRECTIVE .
7. 83FT11-XX-9909, THE XX IS FOR SPRING CODE NUMBER.

REV	DESCRIPTION	DATE	DRAWN
1	RELEASE FOR PRODUCTION	JAN-30-2012	Chris Hsu
1A	SPECIAL DIMENSIONS INDEX FOR INTEL	FEB-29-2012	Chris Hsu
1B	REMOVE DIMENSION FOR INTEL	APR-18-2012	Chris Hsu
1C	ADD ±10% TOLERANCE OF SPRING FORCE RATE FOR INTEL	MAR-07-2013	Chris Hsu
1D	ADD THE SPRING OF 52FT03 FOR INTEL CONFIRMATION.	Sep-09-2014	Chris Hsu

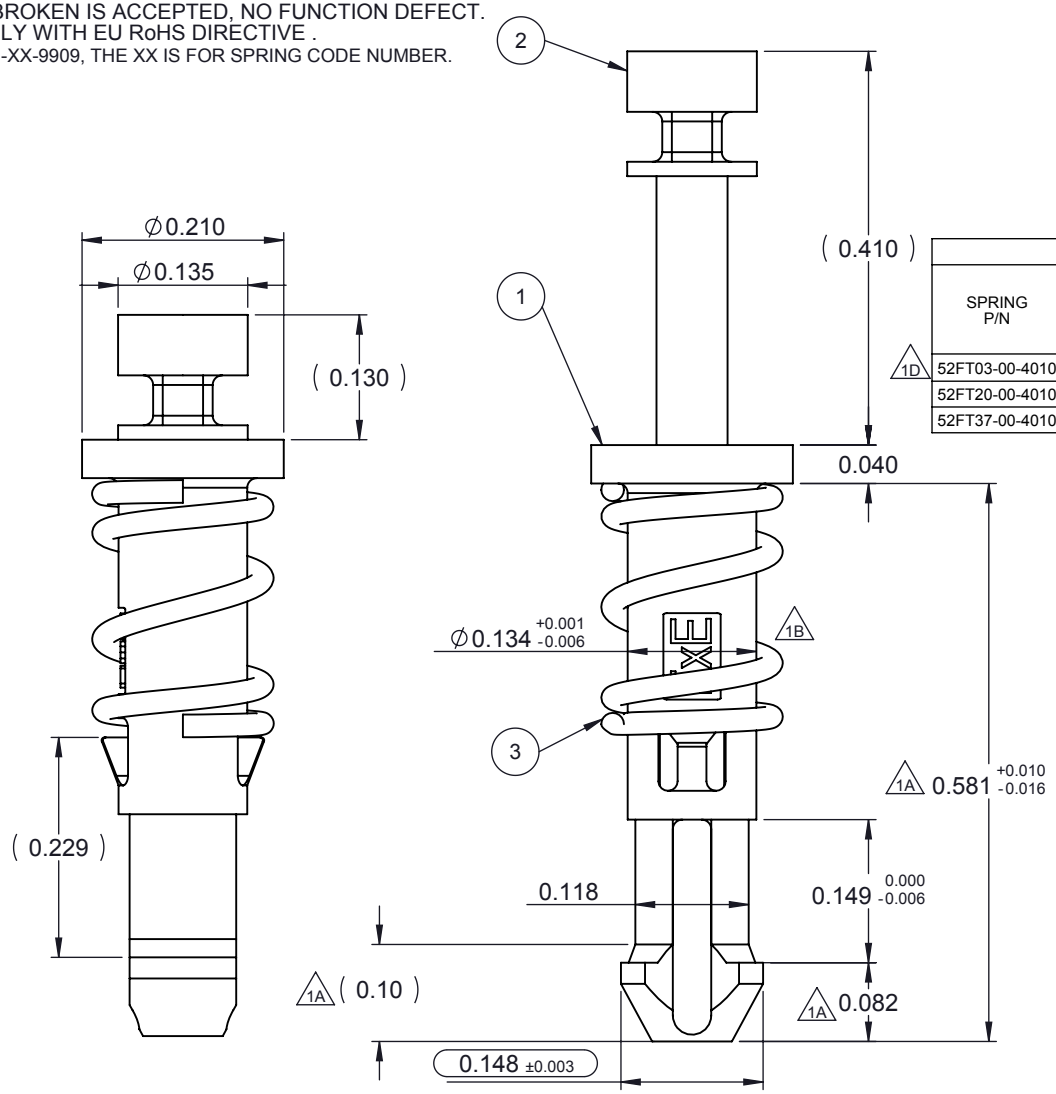

SPRING SPEC								Mark
SPRING P/N	SPRING CODE	A $\pm^{0.028}_{0.004}$ (inch)	∅B ±0.002 (inch)	∅C $\pm^{0.008}_{0}$ (inch)	Total Coils	Force Rate ±10% (lbf/in) 1C	Material	
1D 52FT03-00-4010	03	0.268	0.022	0.140	4.75	21.4	SUS304	
52FT20-00-4010	20	0.268	0.024	0.142	4.00	31.4	SUS304	
52FT37-00-4010	37	0.268	0.028	0.144	4.00	53	SUS304	

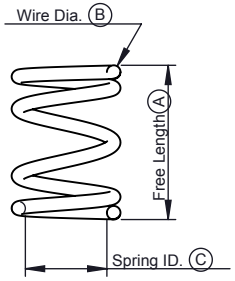

NO.	-003	-002	-001	PART NUMBER	DESCRIPTION
	Q'TY PER ASSY				
3		1		52FTXX-00-4010	SPRING
2		1		39FT87-00-2099	PIN
1		1		39FT77-00-2099	BODY
-			1	83FT11-xx-9909	83FT11-XX FASTENER ASSEMBLY

MATERIAL : SEE NOTE

PROJ. NO.: -

UNLESS OTHERWISE SPECIFIED INTERPRET DIMENSIONS AND TOLERANCES IN ACCORDANCE WITH ASME Y14.5M-1994 DIMENSIONS ARE IN INCH TOLERANCES:
ALL Angles ±1°
ALL DIMENSION ±0.005"

This print and any design thereon is the property of ITW–ASIA, Division Illinois Tool Works Inc. This print is to be returned upon request or completion of the work for which it was issued. It is to be used only for the purpose for which it was expressly loaned and is not to be copied in any manner, nor is information taken therefrom to be transmitted, or passed on to others without written permission of Illinois Tool Works Inc.

ITW 安天德百電股份有限公司 Electronic Business Asia Co.,Ltd.

PART NAME: 83FT11-xx SERIES FASTENER

REV 1D

PART NUMBER: 83FT11-XX-9909

SHEET 1/1

" ⬭ " MARK DIMENSION NEED TO BE MEASURED FOR FQC INSPECTION.
" ▲ " MARK FOR CPK WHEN SUBMIT FAI.
" ( ) " MARK FOR REFERENCE DIMENSION.

THE DRAWING CONTAIN ITW CORPORATION CONFIDENTIAL INFORMATION.
IT IS DISCLOSED IN CONFIDENCE AND ITS CONTENTS MAY NOT BE DISCLOSED.
REPRODUCED,DIPLAYED OR MODIFIED,WITHOUT THE PRIOR WRITTEN CONSENT OF ITW CORPORATION.
此圖含ITW公司之機密文件,若無正式核准不的揭露複製展示或修改之

DRAWN BY	Chris Hsu	DATE	JAN-30-2012
CHK BY	Marvin Chuang	DATE	JAN-30-2012
APP BY	Casey Chang	DATE	JAN-30-2012

■ SALES PRINT

ALL CHANGES TO OCCUR ON CAD SYSTEM

■管制文件(C)/ □非管制文件(U)